bürkert
FLUID CONTROL SYSTEMS

Electric Rotary Actuator - On/Off or programmable regulating actuator

- Direct mounting for quarter-turn valves
- Manual override standard
- Corrosion resistant
- Adjustable limit switches
- Multi-voltage version
- Protection class IP67

Type 3005 can be combined with...

Type 2651
2-piece St. St.
Ball valve

Type 2654
3-piece St. St.
Ball valve

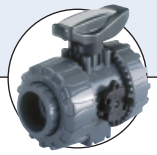

Type 2657
Plastic
Ball valve

Type 2672
Metal
Butterfly valve

Type 2675
Plastic
Butterfly valve

The rotary actuator type 3005 is a compact and powerful actuator system which provides a long service life.
Materials and components have been chosen for maintenance-free operation and ensure low thermal loading on the actuator. The modular design offers many options such as extra limit switches or potentiometers to be added to the basic unit.

Technical data	
Torque	150 and 300 Nm (see ordering chart) (600 and 1000 Nm on request)
Angle of rotation	90° (+/- 5°)
90° rotation time	30 up to 50 s (see ordering chart)
Duty rating	At max. torque: 50% of the time Regulating actuator: 50% of max. torque
Power supply Tolerance	24 V AC/DC or Multi-voltage 100-240 V AC / 50-60 Hz +/- 10%
Power consumption	85 W (see ordering chart)
Motor protection	Electronic torque limitation
Electrical connection	2 cable glands ISO 20 (Cable plug EN 175301-803 on request)
Mounting	acc. ISO 5211 - F07/F10
Drive	Female star 22 mm; conversion sleeves star 22/17
Installation	Do not mount the actuator with the cover down (head over).

DTS 1000097019 EN Version: C Status: RL (released | freigegeben | validé) printed: 28.01.2009

Technical data	
Limit switches	4 adjustables (2 for motor and 2 additional for feedback) max. 250 V AC/5 A
Manual override	By hand wheel
Actuator standard signal **(programmable)** Input Output	 - 0-10 V - 4-20 mA - 0-20 mA - 0-10 V - 4-20 mA - 0-20 mA
Mechanical limit stops	Standard
Visual position indicator	Standard
Material Cover, Housing Axis, screw Gear	 Nylon / Epoxy coated aluminium Stainless steel Zinc-plated Steel
Protection class	IP67
Ambient temperature	-20 up to + 70°C
Weight	5.6 kg
Heating resistor	4 W (additional 10 W on request)
Options	Three position actuator (180°) Rotation 180° or 270° Feedback On/Off actuators: - Potentiometer 0.1K, 1K, 5K or 10K - Analog signal 4-20 mA Fail safe option 2 extra limit switches

DTS 1000097019 EN Version: C Status: RL (released | freigegeben | validé) printed: 28.01.2009

Exploded view

Motor 150 - 300 Nm

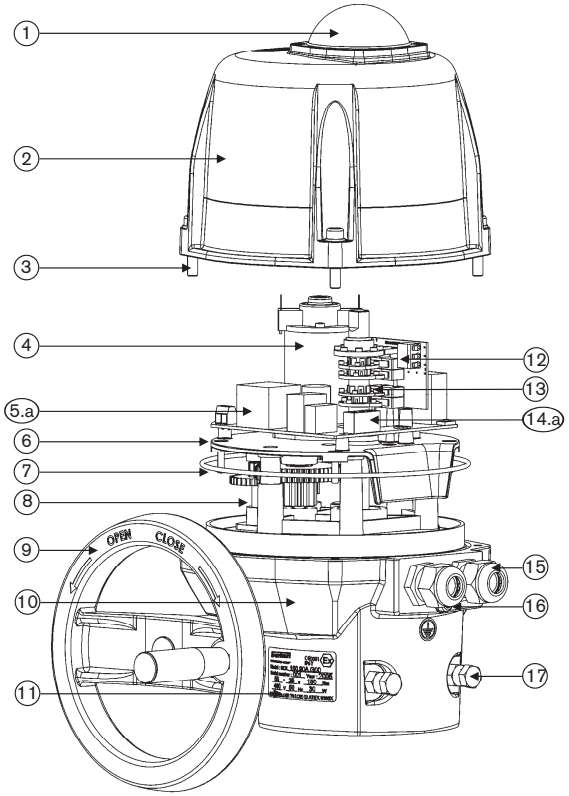

Motor 150 - 300 Nm with positioning card

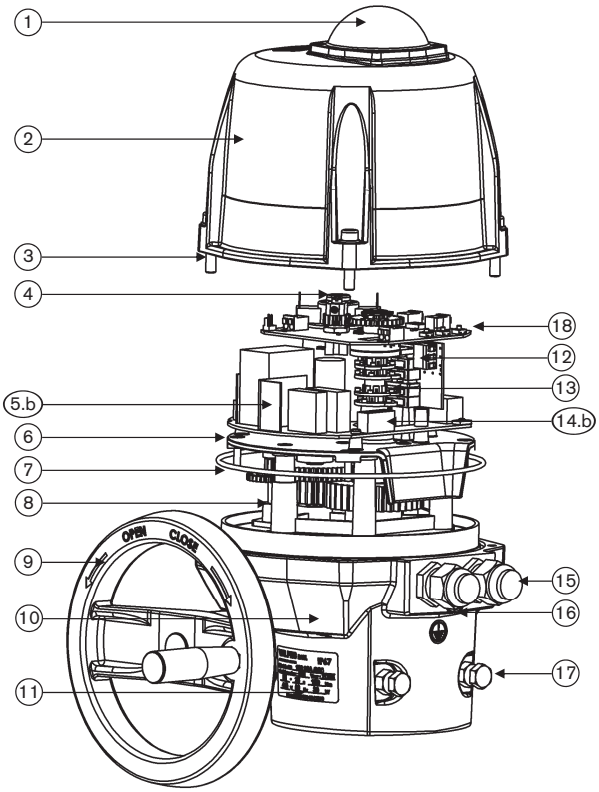

No.	Designation
1	Visual position indicator
2	Cover
3	Stainless steel screws
4	Motor
5.a*	Pilot and power supply card
5.b*	power supply card
6	Gear box
7	O-ring
8	Gear
9	Hand wheel
10	Housing
11	Identification label
12	Auxiliary limit switch terminal
13	Cams
14.a*	Pilot and power supply card
14.b*	Power supply terminal
15	Cable gland ISO M20
16	Earth screw
17	Mechanical limit stops
18	Positioning card (only for actuator with position control)

* Only for multivolt version

DTS 1000097019 EN Version: C Status: RL (released | freigegeben | validé) printed: 28.01.2009

Electrical connections

Multivolt or 24 V AC/DC standard version

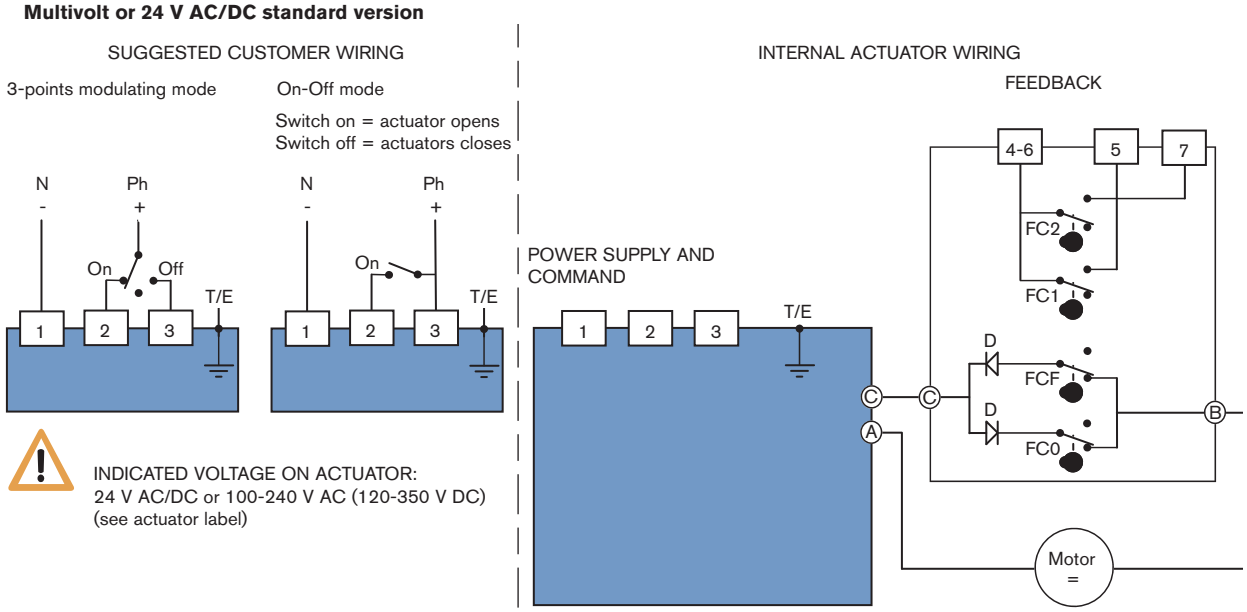

INDICATED VOLTAGE ON ACTUATOR:
24 V AC/DC or 100-240 V AC (120-350 V DC)
(see actuator label)

Multivolt or 24 V AC/DC with programmable analog signal input or output

Symbol	Designation
FCO	Open limit switch
FCF	Close limit switch
FC1	Auxiliary 1 limit switch
FC2	Auxiliary 2 limit switch

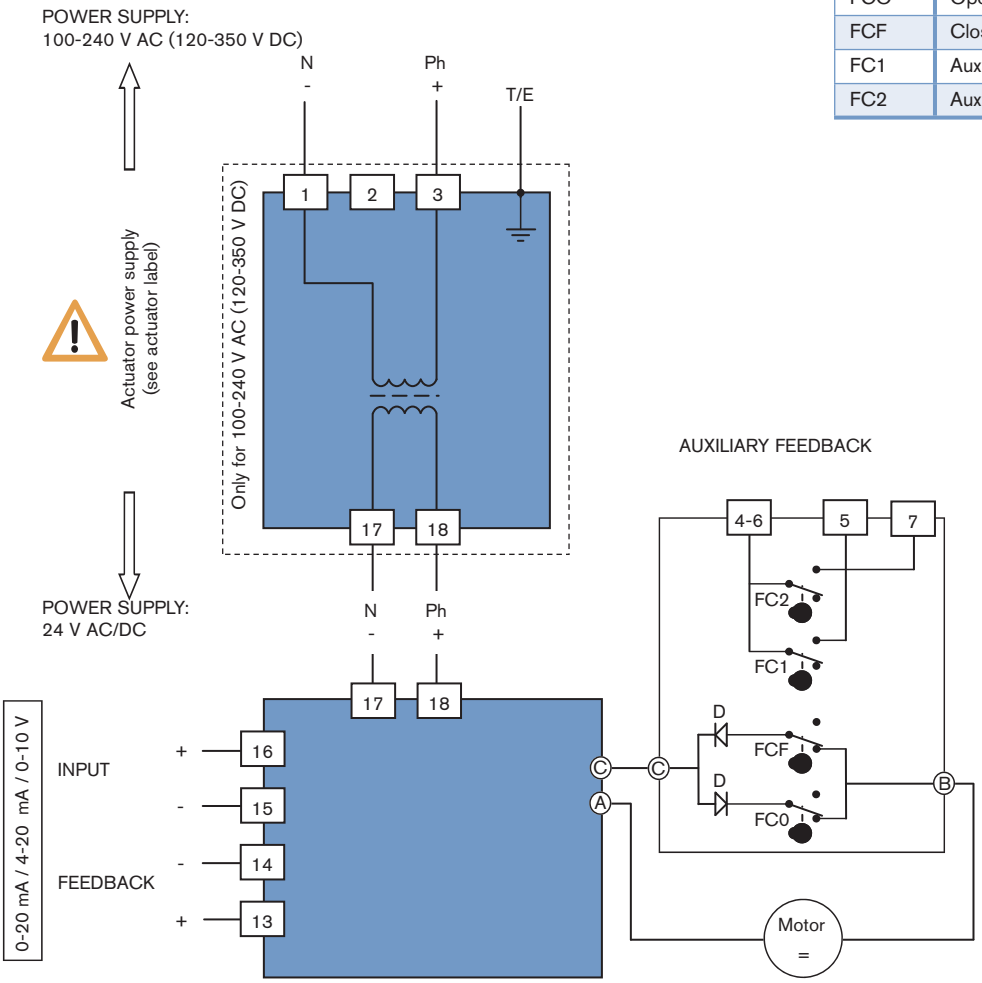

DTS 1000097019 EN Version: C Status: RL (released | freigegeben | validé) printed: 28.01.2009

Dimensions [mm]

Motor 150 - 300 Nm

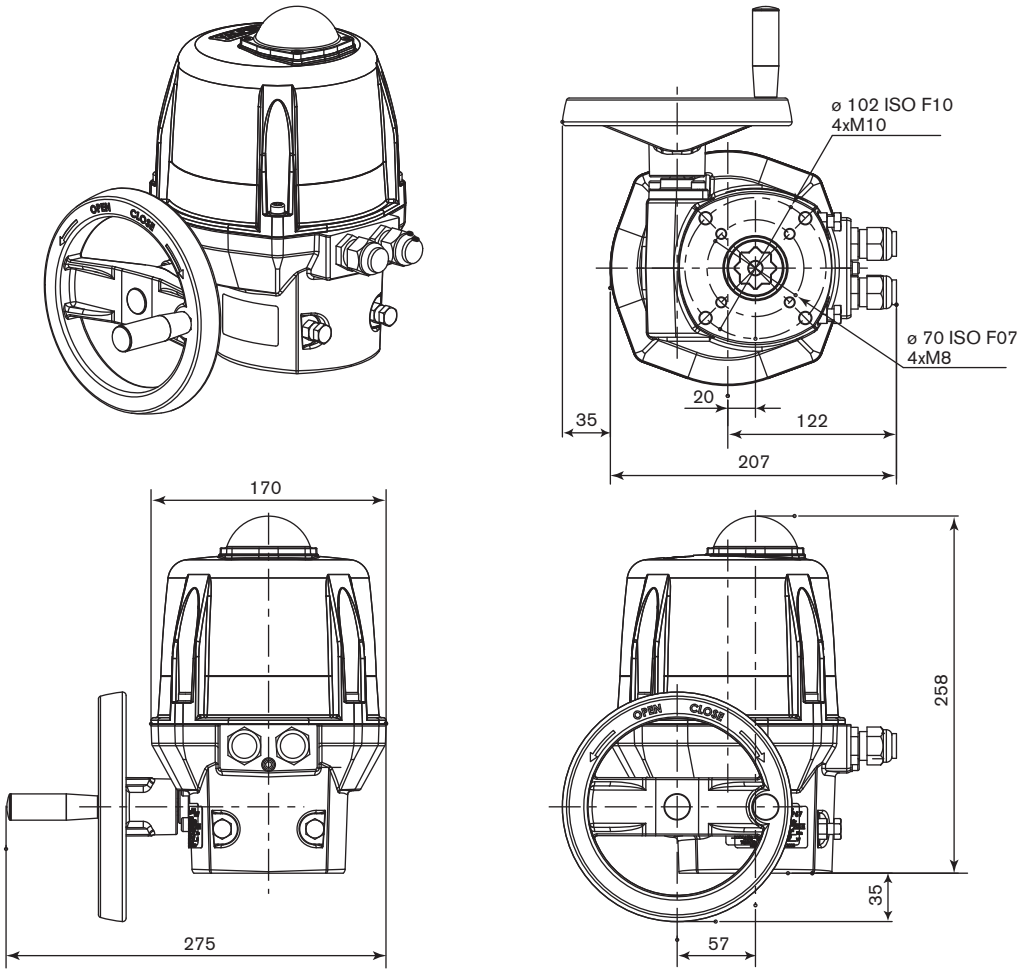

DTS 1000097019 EN Version: C Status: RL (released | freigegeben | validé) printed: 28.01.2009

bürkert

Ordering chart (other versions on request)

Standard version without control function

Drive stars [mm]	Conversion adapter star [mm]	Mounting flange	Torque [Nm]	90° travel [s]	Power con-sumption [W]	Voltage / Frequency [V / Hz]	Item no.
22	22/17	F07-F10	150	30	85	100-240 / 50-60	181 303
						24 AC / DC	181 304
			300	50	85	100-240 / 50-60	181 305
						24 AC / DC	181 306

Positioner version with 4-20 mA, 0-20 mA or 0-10 V programmable analog signal input or output

Drive stars [mm]	Conversion adapter star [mm]	Mounting flange	Torque [Nm]	90° travel [s]	Power con-sumption [W]	Voltage / Frequency [V / Hz]	Item no.
22	22/17	F07-F10	150	30	85	100-240 / 50-60	181 293
						24 AC / DC	179 725
			300	50	85	100-240 / 50-60	181 307
						24 AC / DC	179 726

Further versions on request

Voltage
other power supply

Additional
Torque 600, 1000 Nm

Remark :
For the actuator choice, we recommend a safety torque equal to 1.5 times of the valve maximal torque (2 times for the positioner version).

DTS 1000097019 EN Version: C Status: RL (released | freigegeben | validé) printed: 28.01.2009

Ordering chart accessories

Specifications	Item no.
Key to adjust limit switches	665 296
Conversion adapter star/square 14/9 mm	665 288
Conversion adapter star/square 14/11 mm	665 289
Conversion adapter star/star 22/14 mm	666 684
Conversion adapter star/star 22/17 mm	666 685
Conversion adapter square/square 17/14 mm	665 290
Conversion adapter external square 14/10 mm	668 234

DTS 1000097019 EN Version: C Status: RL (released | freigegeben | validé) printed: 28.01.2009

To find your nearest Bürkert facility, click on the orange box → www.burkert.com

In case of special application conditions, please consult for advice.

We reserve the right to make technical changes without notice.
© Christian Bürkert GmbH & Co. KG

0901/3_EU-en_00895026